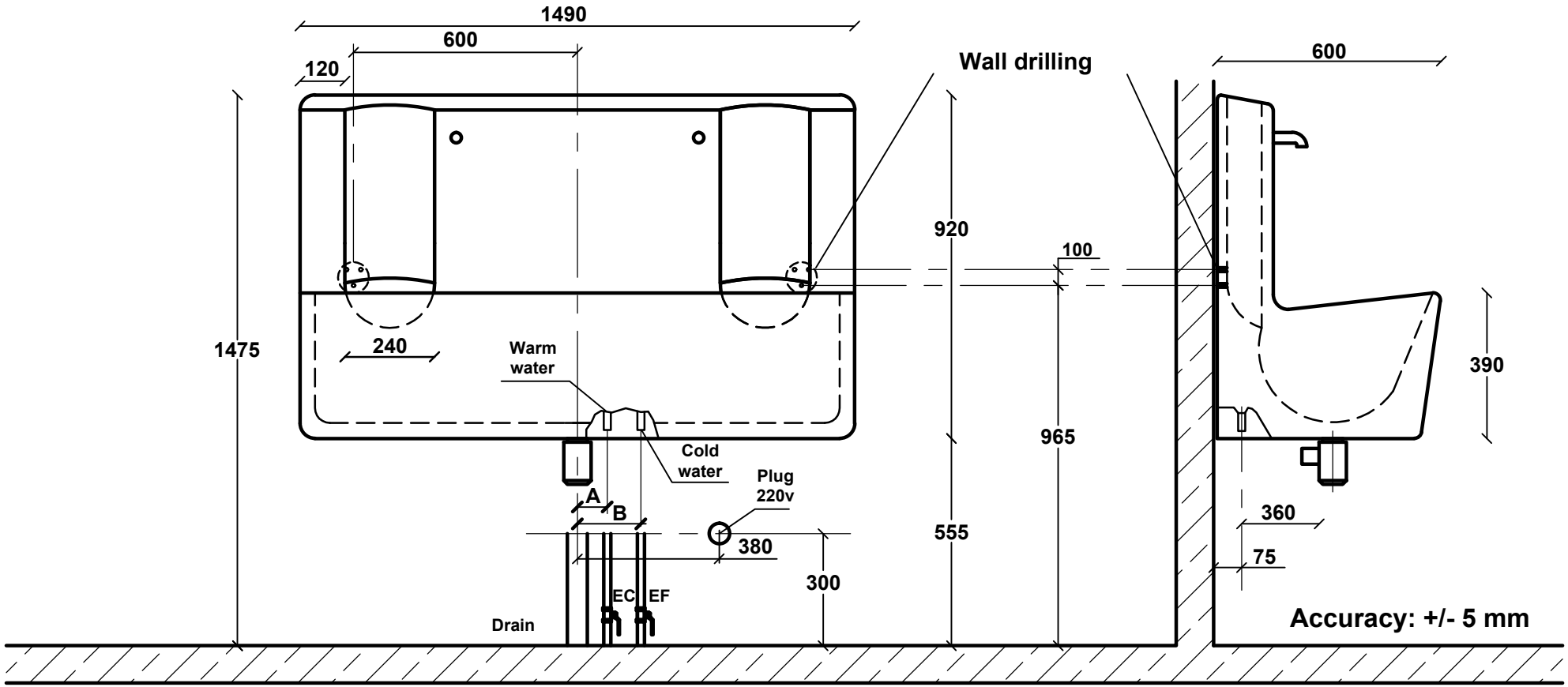

MODEL	POWER SUPPLY	A MT		B MT		WATER SUPPLY CW/HW	EXHAUST	SD2x2 (2 stations photocells control) 2 electronic soap dispenser
SD2x2	220 V	80		170		15X21 male	40	HYCARE MEDICAL SAS ZAC ATHELIA II 100 IMPASSE DU SERPOLET 13704 LA CIOTAT - FRANCE
SCRUB UP SINK MAXISCRUB 2 WATER STATIONS								